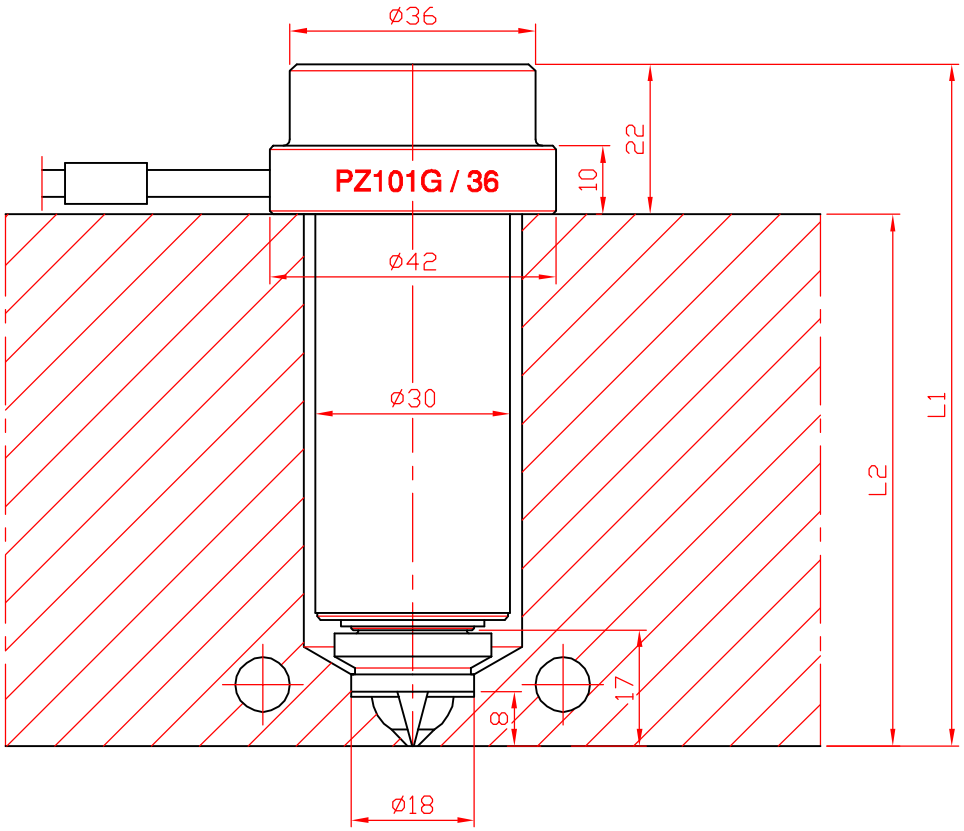

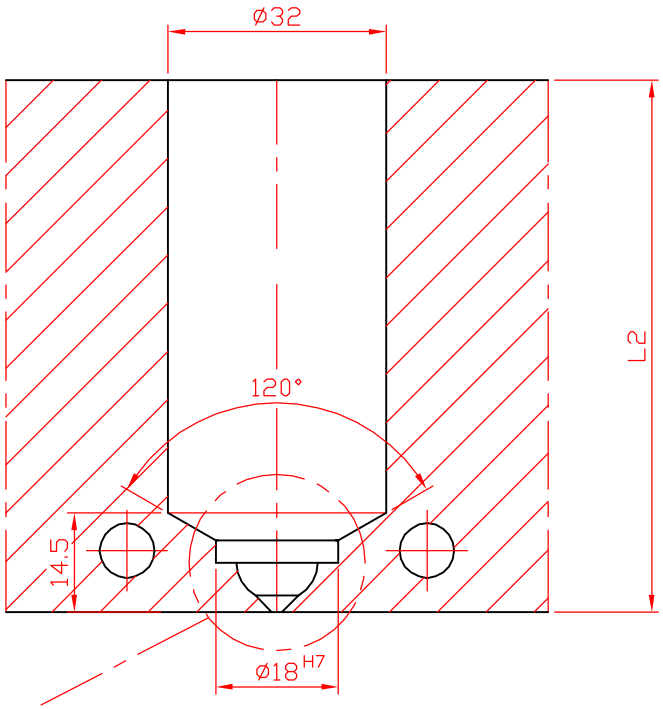

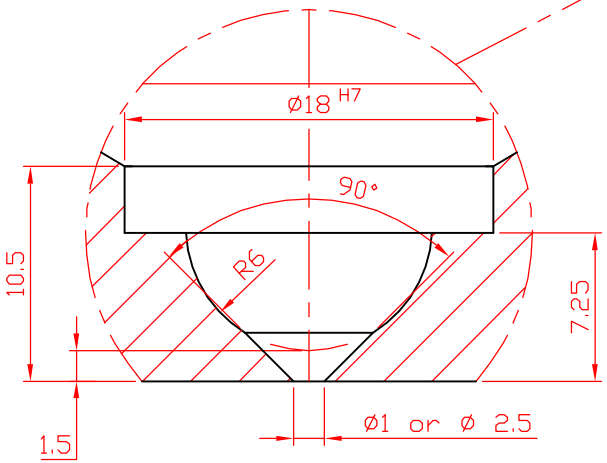

NOZZLE TYPE	L1	L2
PZ101G / 36 X 200	200	178
PZ101G / 36 X 180	180	158
PZ101G / 36 X 160	160	138
PZ101G / 36 X 140	140	118
PZ101G / 36 X 120	120	98
PZ101G / 36 X 100	100	78
PZ101G / 36 X 80	80	58
PZ101G / 36 X 65	65	43

PAYA SANAT

HOT RUNNER SYSTEMS

www.ps-hotruuner.com

Tel/Fax: 021- 56714260 - 56714269 - 56714289