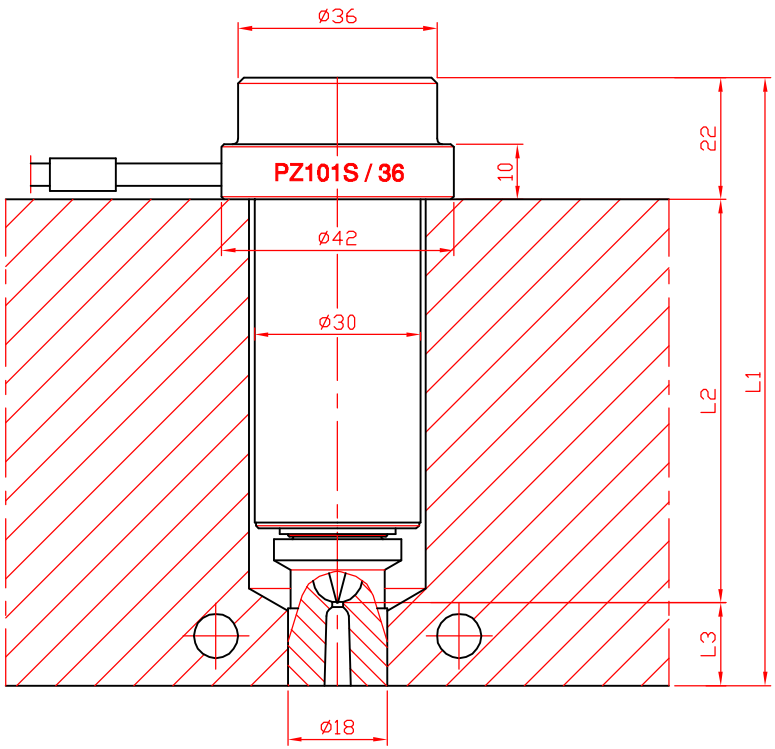

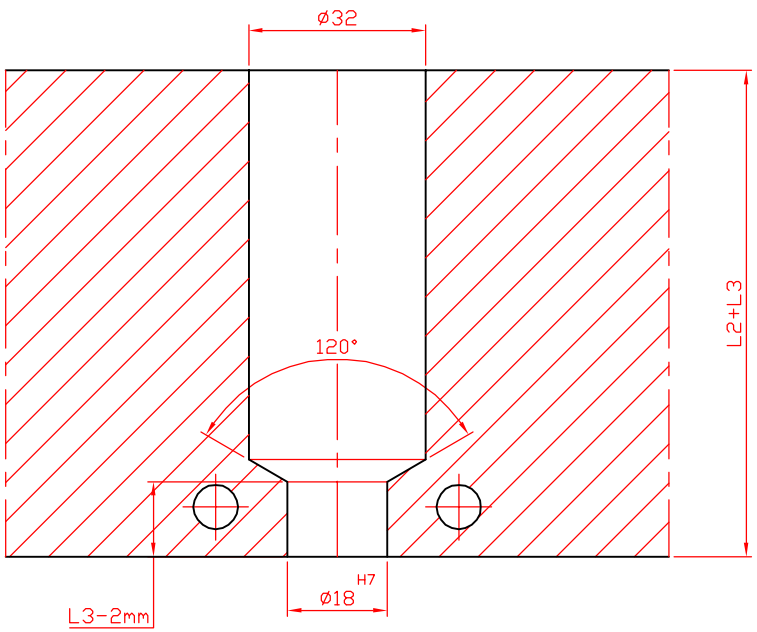

NOZZLE TYPE	L1	L2	L3
PZ101S / 36 X 200 - 230	200 - 230	173	Min 5 - Max 35
PZ101S / 36 X 180 - 210	180 - 210	153	
PZ101S / 36 X 160 - 190	160 - 190	133	
PZ101S / 36 X 140 - 170	140 - 170	113	
PZ101S / 36 X 120 - 150	120 - 150	93	
PZ101S / 36 X 100 - 130	100 - 130	73	
PZ101S / 36 X 80 - 110	80 - 110	53	
PZ101S / 36 X 65 - 95	65 - 95	38	

PAYA SANAT

HOT RUNNER SYSTEMS

www.ps-hotruuner.com

Tel/Fax: 021- 56714260 - 56714269 - 56714289